OIML BULLETIN

VOLUME LVI • NUMBER 1
JANUARY 2015

Quarterly Journal

Organisation Internationale de Métrologie Légale

ISSN 0473-2812

The CIML meets in Auckland, New Zealand
for its 49th meeting

BULLETIN

VOLUME LVI • NUMBER 1

JANUARY 2015

THE OIML BULLETIN IS THE QUARTERLY JOURNAL OF THE ORGANISATION INTERNATIONALE DE MÉTROLOGIE LÉGALE

The Organisation Internationale de Métrologie Légale (OIML), established 12 October 1955, is an inter-governmental organization whose principal aim is to harmonize the regulations and metrological controls applied by the national metrology services of its Members.

EDITOR-IN-CHIEF: Stephen Patoray
EDITOR: Chris Pulham

THE ONLINE BULLETIN IS FREE OF CHARGE

ISSN 0473-2812

PRINTED IN FRANCE

JOSÉ MOYARD IMPRIMEUR
8 RUE ROBERT SCHUMAN
10300 SAINTE SAVINE

OIML SECRETARIAT

BUREAU INTERNATIONAL DE MÉTROLOGIE LÉGALE (BIML)

11 RUE TURGOT – 75009 PARIS – FRANCE

TEL: 33 (0)1 4878 1282
FAX: 33 (0)1 4282 1727
INTERNET: www.oiml.org or www.oiml.int
www.metrologyinfo.org

OIML MEMBER STATES

ALBANIA
ALGERIA
AUSTRALIA
AUSTRIA
BELARUS
BELGIUM
BRAZIL
BULGARIA
CAMEROON
CANADA
P.R. CHINA
COLOMBIA
CROATIA
CUBA
CYPRUS
CZECH REPUBLIC
DENMARK
EGYPT
FINLAND
FRANCE
GERMANY
GREECE
HUNGARY
INDIA
INDONESIA
ISLAMIC REPUBLIC OF IRAN
IRELAND
ISRAEL
ITALY
JAPAN
KAZAKHSTAN
KENYA
REP. OF KOREA
MACEDONIA, THE FORMER YUGOSLAV REPUBLIC OF
MONACO
MOROCCO
NETHERLANDS
NEW ZEALAND
NORWAY
PAKISTAN
POLAND
PORTUGAL
ROMANIA
RUSSIAN FEDERATION
SAUDI ARABIA
SERBIA
SLOVAKIA
SLOVENIA
SOUTH AFRICA
SPAIN
SRI LANKA
SWEDEN
SWITZERLAND
TANZANIA
TUNISIA
TURKEY
UNITED KINGDOM
UNITED STATES OF AMERICA
VIETNAM
ZAMBIA

OIML CORRESPONDING MEMBERS

ARGENTINA
AZERBAIJAN
BAHRAIN
BANGLADESH
BARBADOS
BENIN
BOSNIA AND HERZEGOVINA
BOTSWANA
CAMBODIA
COSTA RICA
DOMINICAN REPUBLIC
ESTONIA
FIJI
GABON
GAMBIA
GEORGIA
GHANA
GUATEMALA
GUINEA
HONG KONG, CHINA
ICELAND
IRAQ
JORDAN
DPR KOREA
KUWAIT
KYRGYZSTAN
LATVIA
LIBERIA
LIBYA
LITHUANIA
LUXEMBURG
MADAGASCAR
MALAWI
MALAYSIA
MALTA
MAURITANIA
MAURITIUS
MEXICO
MOLDOVA
MONGOLIA
MONTENEGRO
MOZAMBIQUE
NAMIBIA
NEPAL
NIGERIA
OMAN
PANAMA
PAPUA NEW GUINEA
PARAGUAY
PERU
QATAR
RWANDA
SEYCHELLES
SIERRA LEONE
SINGAPORE
SUDAN
SYRIA
CHINESE TAIPEI
THAILAND
TRINIDAD AND TOBAGO
UEMOA
UGANDA
UKRAINE
UNITED ARAB EMIRATES
URUGUAY
UZBEKISTAN
YEMEN
ZIMBABWE

Contents

OIML BULLETIN

VOLUME LVI • NUMBER 1
JANUARY 2015

technique

evolutions

update

DELEGATES ATTENDING THE 49TH CIML MEETING

Sommaire

BULLETIN OIML

VOLUME LVI • NUMÉRO 1
JANVIER 2015

technique

évolutions

informations

Editorial

Peter Mason
CIML President

Happy New Year 2015

As we enter 2015 I ask myself what will be different in the world of the OIML. And the answer that comes most clearly is that we can expect to transform the way in which we carry out most of our work as a result of the new functions available on the OIML website. For an organisation such as the OIML, a website is more than just the window we show to the rest of the world. Increasingly, it will become central to the way in which we communicate with each other and, crucially, carry out the technical work which is our key role as a standards-making body.

Offering Members the opportunity to update their own information and designate participation in the technical work will ensure that the information needed to carry out our work is distributed more quickly and accurately so that it reaches those who are directly involved in such work. Extending electronic voting to project groups will mean that we are able to make decisions much more quickly. And looking forward, having a standard way of developing, commenting on and amending drafts means that more colleagues across the world of legal metrology will be able to make a contribution.

Making the most of this new set of tools will, however, require some effort on the part of all of us. My personal "New Year's Resolution" is to improve my understanding of everything the new website can do and to make a determined attempt to use it to its full capacity. My experiences so far have confirmed that the new functions are easy to understand and use.

Nevertheless, improved information technology and communications can only take us so far. We also need to ensure that we adapt the way in which we work. The OIML Convention remains the basis of what we do as an organisation, but how we work has changed significantly over the past four years and will continue to do so. At the 49th CIML Meeting a new approach to planning our activities was proposed and I believe this will be very valuable as we continue to develop both the OIML's technical work procedures and the OIML Certificate System.

So there remains much to be done – and much to look forward to.

Wishing you a very successful 2015... ■

Bonne Année 2015

En ce début d'année 2015, alors que je m'interroge sur ce qui va changer dans le monde de l'OIML, la réponse m'apparaît de façon très claire : nous pouvons espérer transformer notre manière d'effectuer la plus grande partie de nos travaux grâce aux nouvelles fonctions du site Internet de l'OIML. Pour une organisation comme l'OIML, un site Internet est bien plus que la vitrine que nous présentons au reste du monde. Il prendra une place de plus en plus centrale dans notre façon de communiquer et, surtout, de conduire les travaux techniques, rôle clé d'un organisme de normalisation comme le nôtre.

Donner aux Membres les moyens de mettre à jour leurs propres données et d'indiquer leur participation aux travaux techniques garantira une diffusion plus rapide et plus fiable des informations requises pour réaliser nos travaux afin d'atteindre ceux qui sont directement impliqués dans ces travaux. Étendre le vote électronique aux groupes de projet favorisera une prise de décisions accélérée. Et s'agissant des perspectives à terme, disposer d'une méthode normalisée pour élaborer, commenter et amender des projets permettra à un plus grand nombre de collègues de la communauté de la métrologie légale d'apporter leur contribution.

Mais, pour tirer pleinement parti de cette nouvelle panoplie d'outils, chacun de nous doit faire des efforts. Pour ma part, voici ma « résolution du Nouvel an » : mieux connaître toutes les possibilités qu'offre le nouveau site Internet et tenter résolument de l'exploiter à sa pleine capacité. Si j'en crois mon expérience à ce jour, ses nouvelles fonctions sont simples à comprendre et à utiliser.

Améliorer la technologie informatique et la communication n'est cependant qu'un début. Nous devons aussi adapter nos méthodes de travail. Si la Convention de l'OIML demeure le fondement de notre activité en tant qu'organisation, notre manière de travailler a, quant à elle, beaucoup changé ces quatre dernières années et continuera de changer. À sa 49ème réunion, le CIML a proposé une nouvelle stratégie de planification de nos activités qui sera, à mon avis, très utile alors que nous poursuivons le développement des procédures relatives aux travaux techniques de l'OIML et du Système de Certificats OIML.

Il reste donc beaucoup de choses à faire, mais aussi beaucoup de perspectives positives à venir.

Je vous souhaite à tous de grandes réussites pour l'année 2015… ■

PERFORMANCE OF "TUNING FORK" LOAD CELLS

Development of modularizing technology and its application

Naoya Shinozaki, Kohei Okamoto, Masaru Ikeshima, Kozo Terunuma, Kazufumi Naito,
Shinko Denshi Co. Ltd.

Keywords:

Double ended tuning fork sensor, tuning fork scale, tuning fork load cell, OIML R 76 [1], OIML R 60 [2], load cell [1,2], module[1], digital load cell, legal metrology

1 Abstract

Sensors currently used in electronic weighing instruments are mainly electromagnetic force balances, strain gauges, and tuning forks. Among them, double ended tuning fork sensors (DETF sensors) have been put into practical use by Shinko Denshi Co. Ltd.

DETF sensors have superior long-term stability, and their resolution and repeatability are equivalent to those of electromagnetic force balance sensors. The sensors are also as suitable for measuring relatively heavy loads as strain gauge load cells (SG load cells) are. Tuning fork scales share the above-mentioned advantages of both sensors, and are widely used in places where strict quality control is required such as in the pharmaceutical and automotive industries as well as chemical plants and precious metal processing plants.

This paper describes how the authors confirmed the sensor's conformity to accuracy class B 50 in OIML R 60:2000 [2], whose requirements are difficult to achieve even for conventional SG load cells, while detailing its verification outcomes. Fundamental principles and modularizing technology of DETF sensors are also introduced as well as examples of their application.

2 Introduction

DETF sensor development originated when Yuzuru Nishiguchi[2] studied scales with a vibrating wire sensor, and began designing and developing resonators in 1973. A couple of years later, a pressure sensor with tuning fork, designed and developed by a Japanese manufacturer, led to full scale development of the DETF sensor, with the objective of applying this technology to scales. A basic patent was filed in 1983 and the first vibrating tuning fork scale was made into a product. At the time its structure consisted of a Roberval mechanism in which a DETF sensor was embedded.

Table 1 shows the basic structures of mass-detecting DETF sensor units according to the maximum capacities of tuning fork scales.

Table 1 Structures of DETF sensor units

Maximum capacity	Structure of DETF sensor unit
≤ 30 kg	DETF sensor + Roberval mechanism
> 30 kg	DETF sensor + Roberval mechanism with an integrated lever
	(For expanded weighing pan) Multi-point support with DETF sensor + Roberval mechanism with an integrated lever

Later on, the assembly type with a Roberval mechanism (see Figure 1) was further developed into a mono-block structure, illustrated in Figure 2; both were chosen according to the intended use.

[1] **OIML R 76:2006 [1] T.2.2 Module**

Identifiable part of an instrument that performs a specific function or functions, and that can be separately evaluated according to specific metrological and technical performance requirements in the relevant Recommendation. The modules of a weighing instrument are subject to specified partial error limits.

Note: Typical modules of a weighing instrument are: load cell, indicator, analog or digital data processing device, weighing module, terminal, primary display.

[2] The founder of Shinko Denshi Co. Ltd.

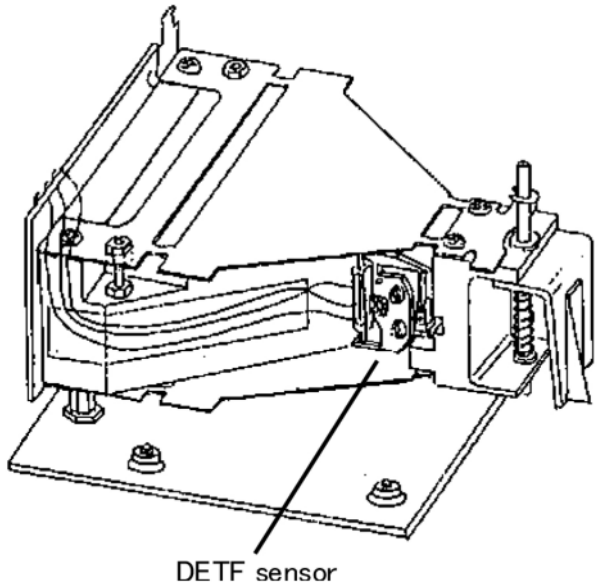

Figure 1 DETF sensor unit (Assembly type)

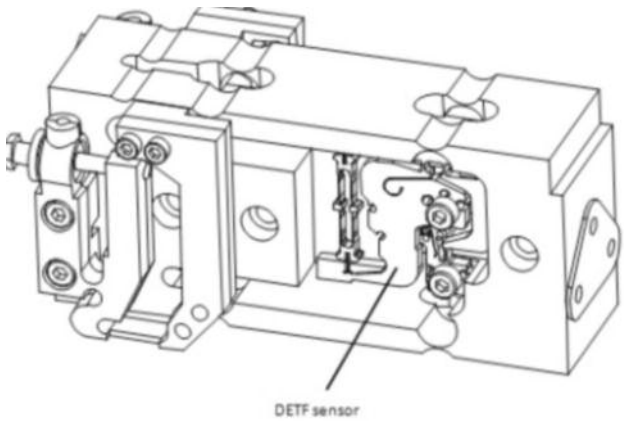

Figure 2 DETF sensor unit (Mono-block type)

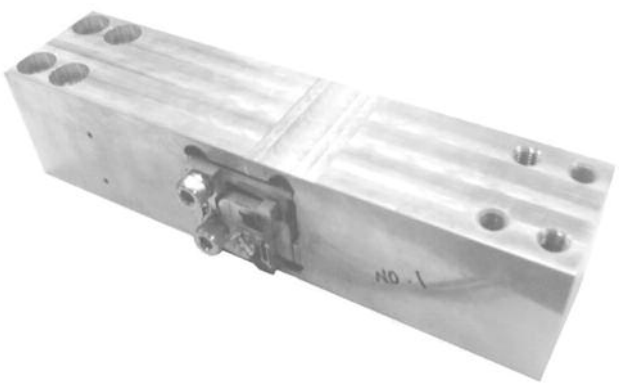

Photo 1 Outline of a DETF sensor unit (with integrated lever)

Integrating a lever with a Roberval mechanism (see Photo 1) enabled the unit to be employed in a tuning fork scale with a maximum capacity of 30 kg and above. Utilizing a plurality of these units also contributed to the expansion of the weighing pans.

Recently, both the pharmaceutical and the automotive industries have demanded weighing systems suited for measuring objects according to the amount or attributes in respect of higher reliability and appropriate quality control. However, it is not practical for a complete instrument to be incorporated into a weighing system. To address this issue, it was necessary to develop a modular sensor.

Tuning fork scales employing these units achieve a specification with a maximum capacity of 300 kg, an actual scale interval of 1 g and a verification scale interval of 10 g.

The National Metrology Institute of Japan, National Institute of Advanced Industrial Science and Technology (NMIJ/AIST) [3] has verified, confirmed and reported the results of the DETF sensor units' characteristics of temperature, repeatability and long-term stability. Regarding the legal metrological performance of tuning fork scales, NMIJ/AIST has already granted Japanese type approvals.

In light of the above, it is planned to apply for OIML certificates of conformity for the sensors according to OIML R 60:2000 [2]. Prior to this application, all the performance tests in OIML R 60:2000 [2] were conducted.

The DETF sensor's performance has served to reduce the gravitational distortion that affects the focus of the world's largest and most accurate optical-infrared telescope (the Subaru Telescope, operated by Japan's national astronomical observatory, located at the summit of Mauna Kea, Hawaii, USA).

3 Design and development of the tuning fork load cell

3.1 Principle and structure of DETF sensor

The basic principle of a DETF sensor is that it utilizes a physical phenomenon where the resonant frequency (f) of a double ended tuning fork resonator changes as tension (T) changes.

Practically, the tension (T) and the resonant frequency (f) of a vibrating wire are represented by formula (1), so that the tension (T) can be determined by measuring the frequency (f).

$$f = \frac{1}{2l}\sqrt{\frac{T}{\rho}} \qquad (1)$$

l = String length
ρ = Density

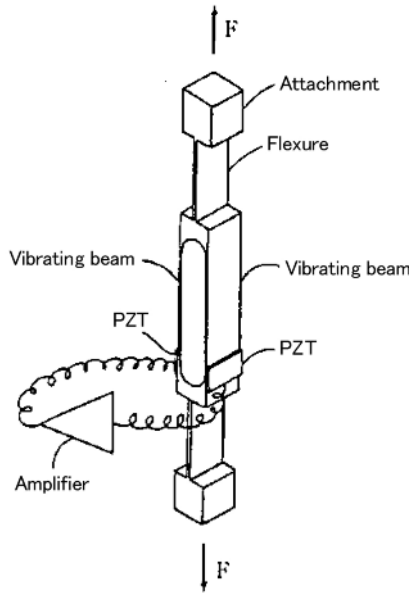

Figure 3 DETF resonator

Figure 3 shows a diagram of a double-ended tuning fork resonator whose shape resembles two common tuning forks joined at each end.

One of the DETF resonator's distinguishing characteristics is its stable vibration at a high value of Q, due to the fact that opposite reactions and moments mutually cancel each other out by two vibrating beams moving symmetrically, resulting in a confinement of the oscillation energy. Also, flexures attached to both ends of the vibrating beams mitigate unfavorable effects that might be caused by a state of the assembly or from the outside.

Two piezo-ceramic elements (exciting and sensing), attached to the lower ends of the vibrating beams and connected to an amplifier, cause continuous vibrations. The relation between the frequency (f) and the force (F) is described in formula (2) while the characteristic curve is presented in Figure 4 [4].

$$f = f_0\sqrt{1 + KF} \qquad (2)$$

where $f_0 = C\frac{t}{L^2}\sqrt{\frac{E}{\rho}}$

L = Length of a vibrating beam
t = Thickness of a vibrating beam
E = Young's modulus (N/mm^2)
ρ = Density
K and C are constants

By counting the clock pulses per cycle, the frequency (f) can be converted into digital values. A micro-processor performs compensation and linearization accordingly.

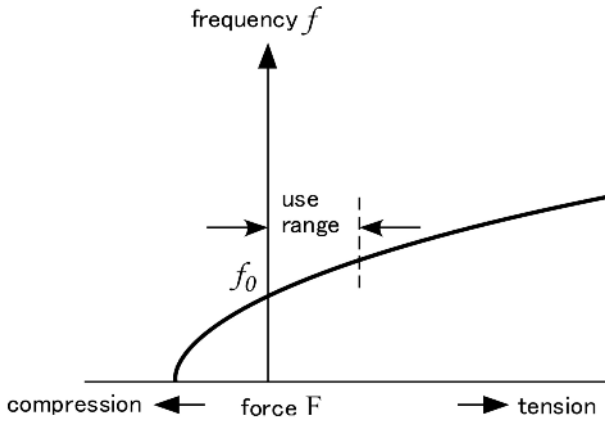

Figure 4 Relation between force (F) and frequency (f)

DETF sensors fall into a category of force sensors that convert the vibration frequency (f) into a weight value. As illustrated in Figure 5, the basic structure of the DETF sensor is an integration of a double-ended tuning fork and a lever. The leverage ratio and thickness of the body have a variation according to the maximum capacities of the sensors.

As formula (2) explains, the resonant frequency (f) of a DETF sensor varies according to temperature changes on Young's modulus, therefore the temperature variation needs to be small. Given this situation, a constant modulus alloy having a small temperature coefficient of Young's modulus was adopted as the DETF sensor material.

Generally, a constant-modulus alloy is widely used in spring scales as well as hairsprings in watches [5]. The thermal coefficient of Young's modulus of the constant-modulus alloy currently used for the DETF sensor is about one-hundredth that of stainless steel. The alloy used for the sensor also has tensile and yield strengths equal to or better than that of spring steel, resulting in better creep and durability performance.

A DETF sensor is cut out from a constant-modulus alloy plate with a wire electrical discharged machine with a precision of 10 µm (see Photo 2).

3.2 Design and development of the tuning fork scale

Recent electronic weighing instruments are classified into the categories of force balance, electrical resistance and resonant sensors according to their mass-detecting functions. Figure 6 shows a relation between maximum capacities and scale intervals (e) that pertain to each category of electric weighing instruments. Electrical resistance sensors are used to measure greater masses, whereas force balance sensors are for smaller masses.

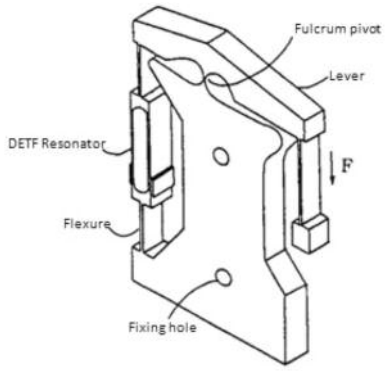

Figure 5 Basic structure of a DETF sensor

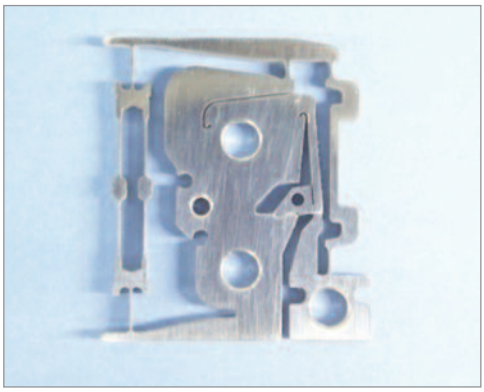

Photo 2 Outline of a DETF sensor

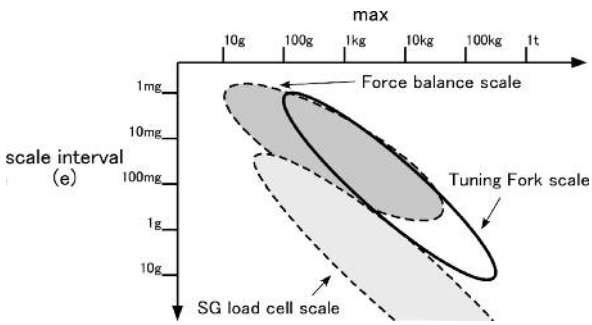

Figure 6 Relation between maximum capacities and scale intervals (e)

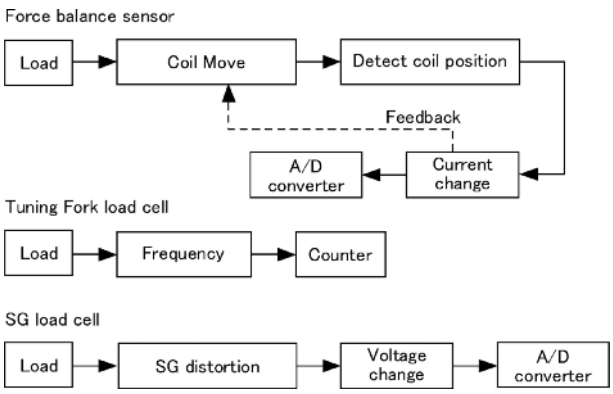

Figure 7 Load conversion flowcharts for each sensor

Two types of resonant sensors are incorporated into scales; one is with a wire and the other is with a DETF resonator. In the 1970s, scales with wire resonators were produced for practical use in Western countries, but today, tuning fork scales are widely used. Major features of the tuning fork scales are as follows:

- fewer breakdowns are expected thanks to their simple structure (using fewer components), compared to scales with force balance sensors;
- tuning fork scales do not need A/D converters as shown in Figure 7 due to direct conversion of frequency into mass value; and
- temperature error and time-dependent changes attributed to electronic circuits are very limited as A/D converters and amplifiers are not required.

Also, tuning fork scales have excellent temperature characteristics with extremely small temperature coefficients of span with $\pm 0.5 \cdot 10^{-6}$/°C and of zero indication with $\pm 2 \cdot 10^{-6}$/°C [6].

A further advantage of tuning fork scales is that the scales can be explosion-proof since very little electricity (of the order of μW) is required to power them. In particular, they easily conform to the standards for explosive atmospheres (IEC60079: Ex ia IIB T4) [7], which are hard to follow for scales with electrical resistance or force balance sensors in the category of accuracy class II (OIML R 76:2006) or higher standards. Explosion-proof tuning fork scales with high accuracy have been made into products [5, 6].

The temperature increase by self-heating in a DETF sensor is negligibly small so that the sensor has a shorter warm-up time and can be used within one minute after switching on the electrical power, which is of benefit on site.

As of September 2014, tuning fork scales have obtained more than 30 approvals of types according to OIML R 76:2000, EC Directives and the Measurement Act of Japan. Among them, Japanese type approvals of Class I (number of verification scale intervals 220 000) and Class II (80 000) were granted.

To meet the demands of various industries, the current product lineup includes analytical balances with a maximum capacity of 220 g and the smallest scale interval of 0.1 mg, high accuracy weighing platforms with a maximum capacity of 300 kg and the smallest scale interval of 1 g, as well as high accuracy explosion-proof scales.

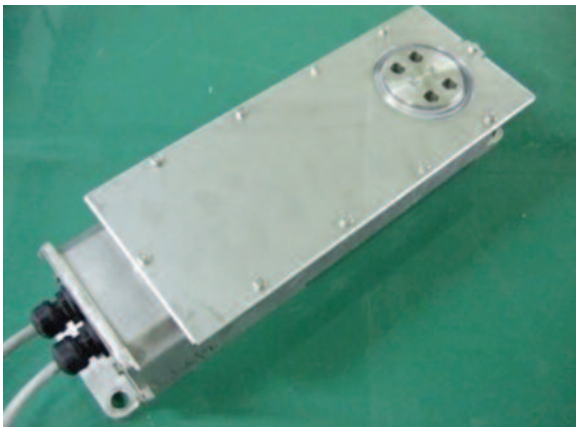

Photo 3 Outline of a tuning fork load cell

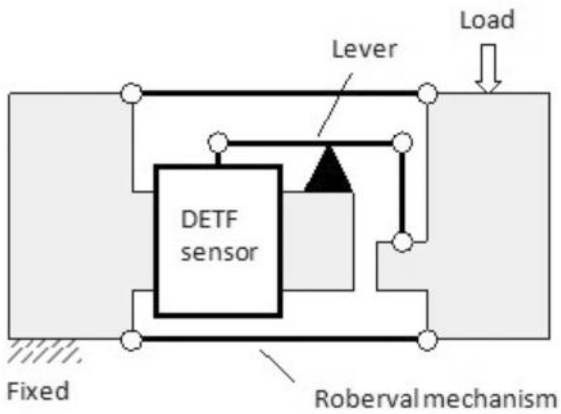

Figure 8 Diagram of a DETF sensor unit

3.3 Development of tuning fork load cells

3.3.1 Structure of tuning fork load cells

A recently developed tuning fork load cell comprises a DETF sensor unit (see Photo 1) and an electric circuit; both are enclosed in an airtight and dustproof stainless steel case, which leads to high durability and makes them corrosion-resistant. The outline is shown in Photo 3.

The structure of a DETF sensor unit has a strain body consisting of a lever and a Roverbal mechanism integrally cut out from a metallic block. Additionally, a DETF sensor is incorporated within it. Its diagram is shown in Figure 8.

A load applied on the strain body is diminished by the lever mechanism then transmitted to the DETF sensor. The leverage ratio is 10:1, and the maximum capacity of 110 kg is thus diminished to a tenth of the capacity. Therefore, a load of 11 kg is to be transmitted to the DETF sensor.

When the maximum capacity is applied, the frequency of the DETF sensor changes by $\Delta f / f \approx 10$ %, whereas the resistance change rate of a SG load cell is $\Delta R / R \approx 0.2$ %. This explains why the output signal variation rate of the DETF sensor is 50 times greater than that of a SG load cell, resulting in higher repeatability.

To ensure its metrological properties remain intact while maintaining water and dustproof performance high, the DETF sensor unit and the case are attached with a diaphragm made of silicon rubber. Also, a breathable and water and dustproof sheet is installed at the bottom of the case to eliminate the internal and external pressure differences of the case. The water and dustproof performance conforms to IP65 (IEC/EN60529)[8].

The signal of the applied load is processed in a built-in electronic circuit to output digital signal.

The maximum capacity of a tuning fork load cell varies within the range 30 kg–300 kg. DETF sensors, DETF sensor units and tuning fork load cells have been granted patents in Japan and abroad.

3.3.2 Test condition and evaluation points

To verify the accuracy of a tuning fork load cell, performance tests were conducted according to OIML R 60:2000 with the specifications below:

Maximum capacity	E_{max} = 110 kg
Minimum verification scale interval	v_{min} = 0.5 g
Maximum number of load cell verification scale intervals	n_{max} = 50 000
Test temperature =	20 °C, 40 °C, –10 °C, 20 °C
Minimum load cell output =	0.1 g
PLC =	0.8

The test items evaluated are shown in Table 2.

Each test item was performed in the order shown in Figure 9. By adding or removing linkage deadweights according to the order, required data at each test temperature were collected and processed.

3.3.3 Test equipment

Performance tests on a tuning fork load cell were conducted on the load cell mounted on a force standard machine situated in a temperature-controlled chamber. As shown in Figure 10, the machine comprised suspended linkage dead-weights and an elevating device under the weights.

A loading jig of the machine was set at a point on the tuning fork load cell to prevent any force except that applied vertically. The mass of the jig was about 1.4 kg. The machine applied loads of the deadweights on the load cell by lowering the elevating device.

Table 2 Test items evaluated

Test item	Clause in R 60:2000
Load cell errors	5.1.1, 5.5.1
Repeatability errors	5.4, 5.5.1
Creep	5.3.1
Minimum dead load output return (DR)	5.3.2
Temperature effect on DR	5.5.1.3

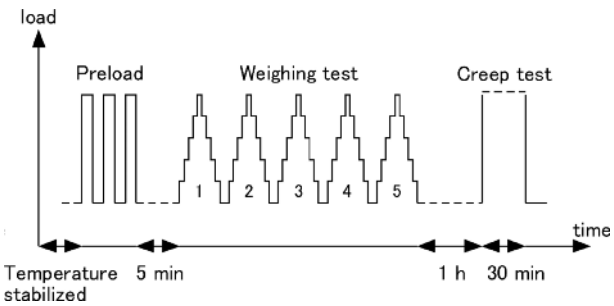

Figure 9 Order of test items

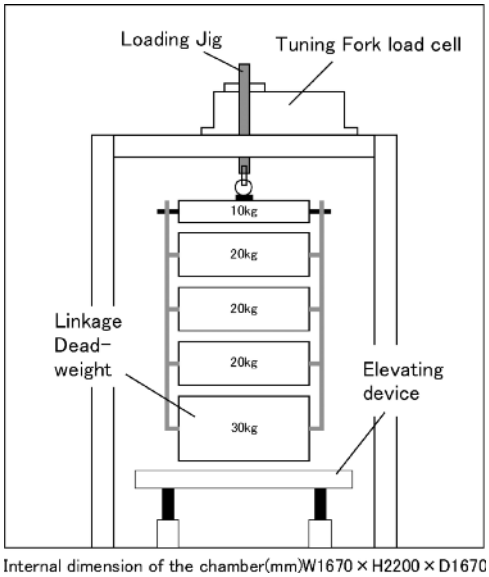

Figure 10 Diagram of test equipment in the temperature-controlled chamber

During the test, air was circulated in the temperature-controlled chamber to keep the temperature constant.

A wind protection sheet enveloped the deadweights to prevent them from swinging, which would cause dispersion in the measured values.

The deadweights were calibrated using weights of class E_2. Loads were applied to the tuning fork load cell by adding weights in the order of 10 kg, 20 kg, 20 kg, 20 kg and 30 kg.

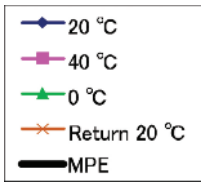

Figure 11 Keys

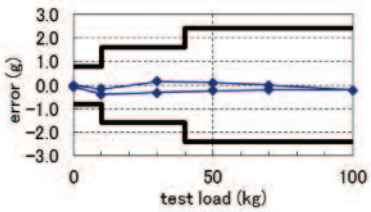

Figure 12 Load cell error (at 20 °C)

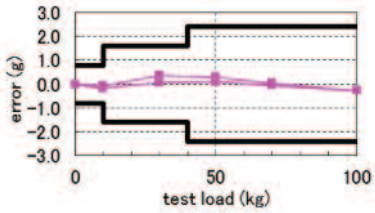

Figure 13 Load cell error (at 40 °C)

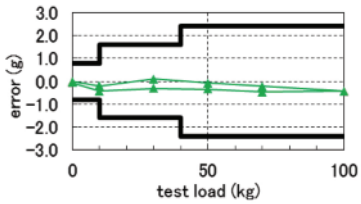

Figure 14 Load cell error (at –10 °C)

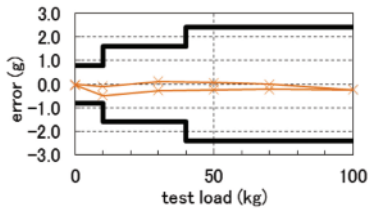

Figure 15 Load cell error (at return 20 °C)

3.3.4 Test result

Figures 12 to 15 show the determined errors of the load cell. Figure 11 shows keys of all the graphs. It was confirmed that each maximum error was below one third of the maximum permissible error (MPE) at each test temperature. A small hysteresis of –0.5 g was found

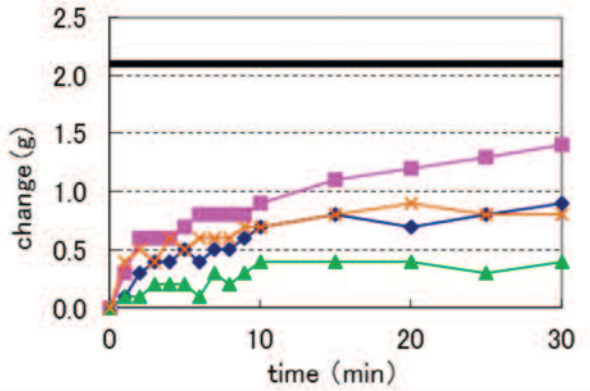

Figure 16 Creep

Table 3 Repeatability error

Test load (kg)	Error (g)				MPE (g)
	20 °C	40 °C	–10 °C	Return 20 °C	
0	0.1	0.1	0.3	0.2	0.8
10	0.2	0.1	0.3	0.2	0.8
30	0.3	0.2	0.2	0.1	1.6
50	0.2	0.2	0.1	0.1	2.4
70	0.2	0.3	0.1	0.2	2.4
100	0.2	0.1	0.2	0.1	2.4
70	0.2	0.4	0.0	0.2	2.4
50	0.1	0.2	0.1	0.3	2.4
30	0.2	0.2	0.1	0.1	1.6
10	0.2	0.1	0.0	0.6	0.8
0	0.0	0.0	0.1	0.1	0.8

Table 4 Minimum dead load output return (DR)

Temperature (°C)	DR (g)	MPE (g)
20	–0.2	1.0
40	0.2	1.0
–10	–0.3	1.0
Return 20	–0.3	1.0

Table 5 Temperature effect on DR

Temperature (°C)	Change (g/5°C)	MPC (g/5°C)
20 → 40	0.33	0.4
40 → –10	0.11	0.4
–10 → 20	–0.32	0.4

at every temperature. Temperature effects on span, linearity and hysteresis, whose characteristics depend on temperature changes, varied at a negligible level on the basis of the standards.

Table 3 shows the repeatability errors determined in the test. It was also confirmed that each maximum error was below one third of the maximum permissible error (MPE) at each test temperature. The maximum errors did not vary by temperature or load. In this test, large errors were found while testing with a load of 70 kg at 40 °C and with a load of 10 kg at a temperature returned to 20 °C, respectively. A cause of the errors could be a condition under which the deadweights swung along with the loading jig that was blown by the air in the chamber. The errors would be smaller if the swing could be suppressed.

Figure 16 and Table 4 show the results of creep and minimum dead load output return (DR), respectively. The maximum rates of creep change at each temperature tend to be greater according to the temperature rise. Likewise, differences in DRs and in 30 - 20 minute creeps became greater as the test temperatures were increased. However, the maximum change rates of both test items at each test temperature were confirmed to be below the MPEs. The increasing creep rate at a higher temperature can be attributed to the metal form of the DETF sensor unit, especially the Roberval mechanism with an integrated lever, whose characteristic of creep is affected by high temperature.

As for temperature effects on minimum dead load output return described in Table 5, it was confirmed that all the variations of the results in each test temperature ranges of 20 °C to 40 °C, 40 °C to –10 °C, and –10°C to 20 °C were within the MPEs.

Therefore, the above results prove the tuning fork load cell's conformity to the requirements of accuracy class B 50 in OIML R 60:2000.

4 Summary and future issues

The authors introduced the basic principles and modularizing technology of a DETF sensor as well as examples of its application.

The test results proved that the performance of the tuning fork load cell conformed to Accuracy Class B 50 in OIML R 60:2000, whose requirements are difficult to achieve for conventional SG load cells. It is planned to apply for OIML MAA certificates of conformity for tuning fork load cells.

Currently, 15 organizations are registered as issuing authorities regarding OIML R 60:2000. Among them, seven organizations, including Germany and Japan, are appointed as issuing authorities for OIML MAA

certificates. The scope of testing and issuing OIML certificates for each organization is listed on the OIML website. As stated in 3.3.1, the tuning fork load cells evaluated are categorized as class B 50, hence the number of testing organizations will be limited. As of the end of September 2014, the number of OIML certificates of conformity according to OIML R 60:2000 is about 750; 450 are for OIML Basic certificates and 300 for OIML MAA certificates, respectively. Since all the certificates issued so far are for SG load cells, the world's first OIML certificate for a tuning fork load cell would be issued if accepted.

In this report, a tuning fork load cell was examined with a maximum capacity of 110 kg. However, the capacity will be extended up to 300 kg or greater. Even non-automatic weighing instruments with such high capacities can be available by multiple applications of tuning fork load cells with the assistance of wider weighing pans.

Meanwhile, the authors are focusing on the design and development of weighing systems in which the tuning fork load cells' longer stability and other characteristics are utilized.

5 Acknowledgments

The authors would like to thank Mr. Kazuo Neda of the International Metrology Cooperation Office, Metrology Management Center in NMIJ/AIST, for his considerable technical support and suitable guidance.

References

[1] OIML R 76:2006 *Non-automatic weighing instruments*
[2] OIML R 60:2000 *Metrological regulation for load cells*
[3] Toshiyuki Hayashi, Yoshihisa Katase, Kazunaga Ueda, et al. XVIII IMEKO World Congress, 2006
[4] Yuzuru Nishiguchi : Offprint from Metrological Control, vol.37, No. 6.7, 1988
[5] Hakaru Masumoto, Hideo Saito : Journal of the Horological Institute of Japan (16), 30-40, 1960-12-15
[6] Masaaki Kobayashi : 1993, Proceedings of the 1993 JSME
[7] IEC60079-0 ed. 6.0: 2011, Explosive atmospheres – Part 0: Equipment - General requirements
[8] IEC60529 ed. 2.2: 2013, Degrees of protection provided by enclosures (IP Code)

To contact the Authors:

Shinko Denshi Co. Ltd. - Tel: +81-3-3835-4577 - Fax: +81-3-5818-6066 - www.vibra.co.jp/global/

Naoya Shinozaki
Engineering Div.
R&D Sec. Chief

Kohei Okamoto
Engineering Div.
R&D Sec. Assistant Manager

Masaru Ikeshima
Engineering Div.
General Manager

Kozo Terunuma
Engineering Div.
Chief Engineer

Kazufumi Naito
Engineering Div.
Senior Managing Director

Call for papers

OIML Members
RLMOs
Liaison Institutions
Manufacturers' Associations
Consumers' & Users' Groups, etc.

- Technical articles on legal metrology related subjects
- Features on metrology in your country
- Accounts of Seminars, Meetings, Conferences
- Announcements of forthcoming events, etc.

The **OIML Bulletin** is a forum for the publication of technical papers and diverse articles addressing metrological advances in trade, health, the environment and safety - fields in which the credibility of measurement remains a challenging priority. The Editors of the Bulletin encourage the submission of articles covering topics such as national, regional and international activities in legal metrology and related fields, evaluation procedures, accreditation and certification, and measuring techniques and instrumentation. Authors are requested to submit:

- a titled, typed manuscript in Word or WordPerfect either on disk or (preferably) by e-mail;
- the paper originals of any relevant photos, illustrations, diagrams, etc.;
- a photograph of the author(s) suitable for publication together with full contact details: name, position, institution, address, telephone, fax and e-mail.

Note: Electronic images should be minimum 150 dpi, preferably 300 dpi.

Technical articles selected for publication will be remunerated at the rate of 23 € per printed page, provided that they have not already been published in other journals. The Editors reserve the right to edit contributions for style, space and linguistic reasons and author approval is always obtained prior to publication. The Editors decline responsibility for any claims made in articles, which are the sole responsibility of the authors concerned. Please send submissions to:

The Editor, OIML Bulletin
BIML, 11 Rue Turgot, F-75009 Paris, France
(chris.pulham@oiml.org)